20.3.3 Exercises - Faraday's law and applications

1.

a. A large horseshoe magnet has a uniform magnetic field between its poles. The magnetic field is zero outside the space between the poles.

A small Hall probe is moved at constant speed along a line XY that is midway between, and parallel to, the faces of the poles of the magnet, as shown in Fig.

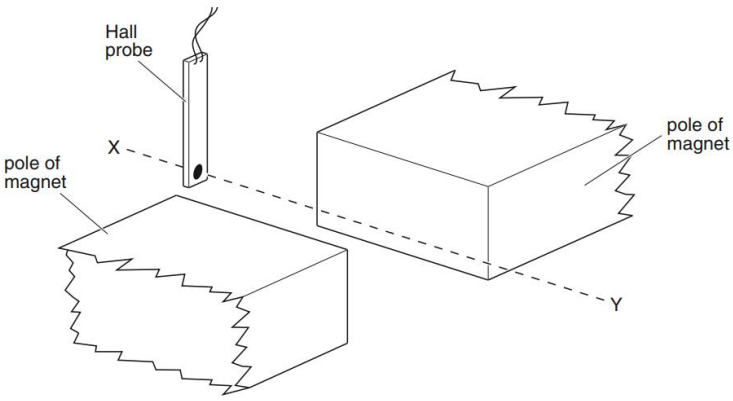

An e.m.f. is produced by the Hall probe when it is in the magnetic field.

The angle between the plane of the probe and the direction of the magnetic field is not varied.

On the axes of Fig. 5.2, sketch a graph to show the variation with time t of the e.m.f.

VH produced by the Hall probe. [2]

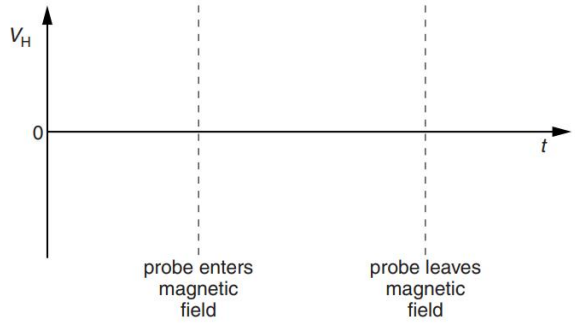

Fig. 5.2

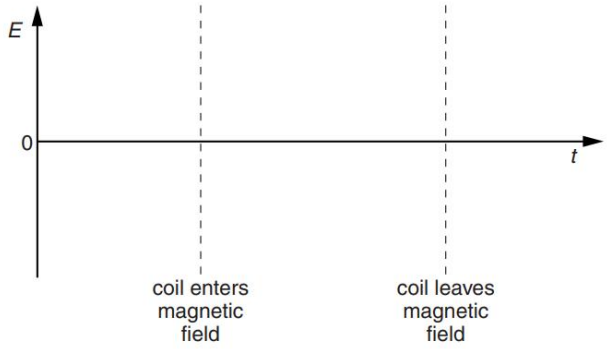

Fig. 5.3

b. Compare the magnetic flux in the two solenoids.

i. State Faraday's law of electromagnetic induction.

.....

.....[2]

ii. The Hall probe in (a) is replaced by a small flat coil of wire. The coil is moved at constant speed along the line XY. The plane of the coil is parallel to the faces of the poles of the magnet.

On the axes of Fig. 5.3, sketch a graph to show the variation with time t of the e.m.f. E induced in the coil. [3]

2. A coil of insulated wire is wound on to one end of a ferrous core and connected to a battery, as shown in Fig.

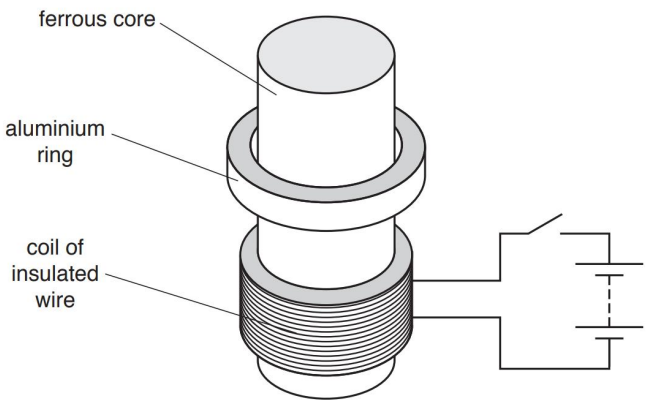

An aluminium ring is placed on the core. The ring can move freely along the length of the core. The switch is initially open.

Use Faraday's law and Lenz's law to explain why the aluminium ring jumps upwards when the switch is closed.

.....

.....

.....

.....[4]

3.

a. coil of wire has 160 turns and diameter 2.4cm. The coil is situated in a uniform magnetic field of flux density 7.5mT, as shown in Fig.

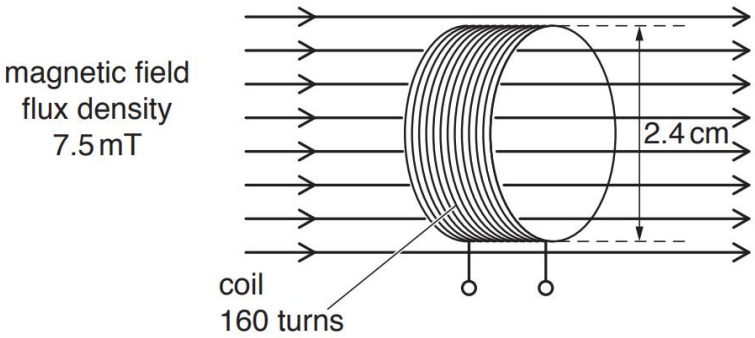

The direction of the magnetic field is along the axis of the coil.

The magnetic flux density is reduced to zero in a time of 0.15s.

Show that the average e.m.f. induced in the coil is 3.6mV. [2]

b. The magnetic flux density B in the coil in (b) is now varied with time t as shown in Fig.

Use data in (b) to show, on Fig. , the variation with time t of the e.m.f. E induced in the coil. [4]

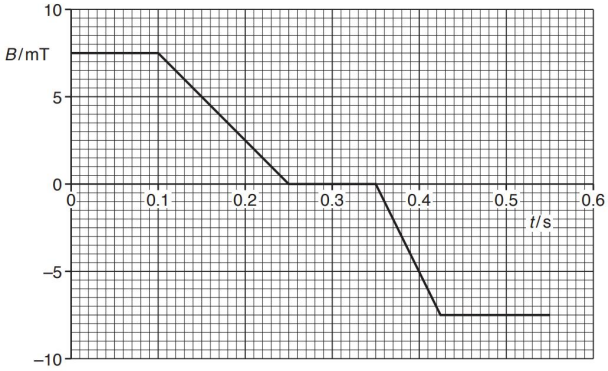

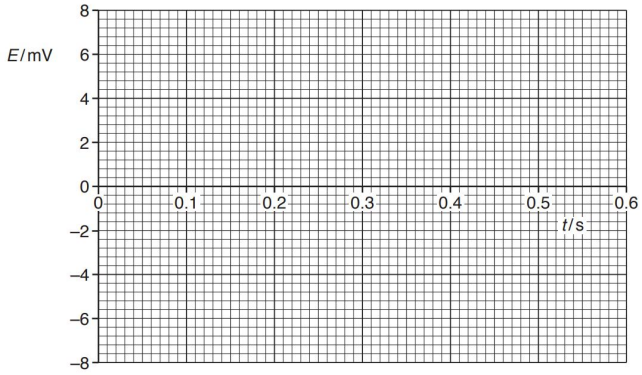

4. A simple transformer is illustrated in Fig.

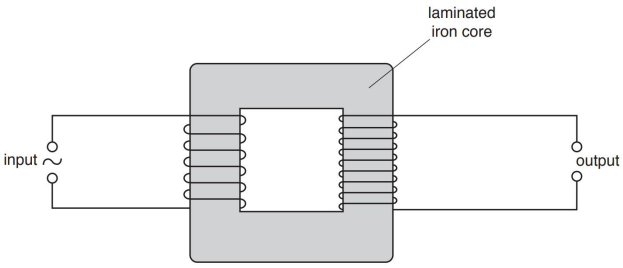

a.

i. State why the transformer has an iron core, rather than having no core.

.....[1]

ii. Explain why the core is laminated.

.....

.....[2]

b. By reference to the action of a transformer, explain why the input to the transformer is an alternating voltage, rather than a constant voltage.

.....

.....

.....[3]

5.

a. Fig. represents a coil of wire ABCD being rotated in a uniform horizontal magnetic field. complete the diagram to show the direction of the current caused by induced e.m.f. in the coil, and the directions of the forces on sides AB and CD that oppose the rotation of the coil.

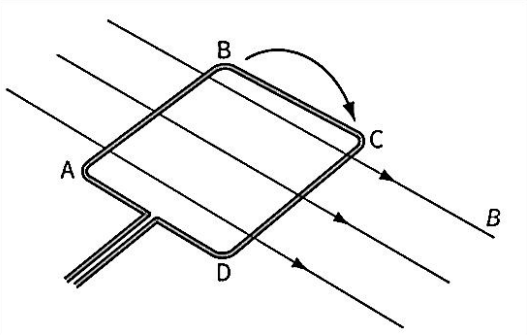

b. A conductor of length L moves at a steady speed v at right angles to a uniform magnetic field of flux density B. Show that the magnitude of the induced e.m.f. E across the ends of the conductor is given by the equation: $E = BLv$

6. A small coil of wire is situated in a non-uniform magnetic field, as shown in Fig.

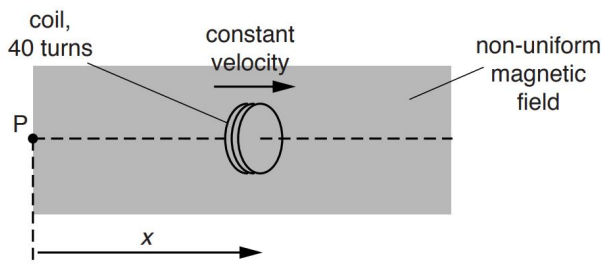

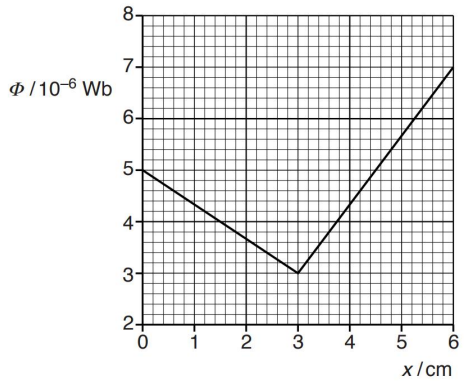

The coil consists of 40 turns of wire and moves with a constant speed in a straight line.
The coil has displacement x from a fixed point P.
The variation with x of the magnetic flux Φ in the coil is shown in Fig.

a. The coil is moved at constant speed between point P and the point where x = 3.0 cm.

i. Calculate the change in magnetic flux linkage of the coil.

change in flux linkage = ... Wb [1]

ii. The e.m.f. induced in the coil is 5.0×10^{-4} V. Determine the speed of the coil.

speed = ... m s^{-1} [2]
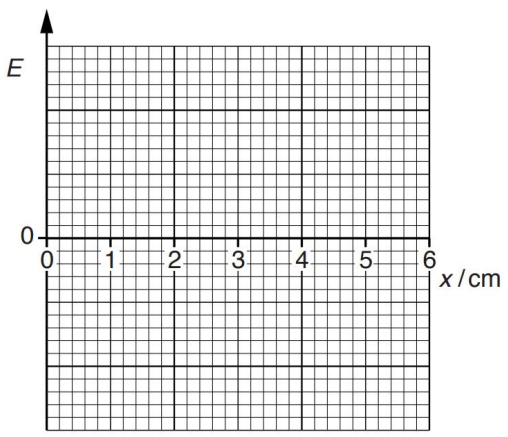
b. On Fig. 10.3, sketch the variation with x of the e.m.f. E induced in the coil for values of x from x = 0 to x = 6.0 cm [2]